SLOAN FLUSHOMETERS

ROYAL maintenance guide

Troubleshooting and Maintaining the Sloan Royal® Flushometer

1. PROBLEM: ***Flushometer does not function.***
CAUSE: (a.) Control Stop or Main Valve is Closed.
(b.) Handle Assembly is worn.
(c.) Relief Valve is worn.
SOLUTION: (a.) Open Control Stop or Main Valve.
(b.) Install Sloan Handle Repair Kit (B-51-A) or replace handle.
(c.) Replace Inside Parts Kit.

2. PROBLEM: ***Insufficient volume of water to adequately siphon fixture.***
CAUSE: (a.) Control Stop not open enough.
(b.) Urinal Flushometer Parts inside a Closet Flushometer.
(c.) Low Consumption Flushometer installed on a non-Low Consumption fixture.
(d.) Water Saver Kit installed in old, non-Water Saver bowl.
(e.) Inadequate volume or pressure at supply.
SOLUTION: (a.) Adjust Control Stop for desired delivery of water.
(b.) Replace Inside Urinal Parts with proper Closet Flushometer Parts.
(c.) Replace A-41-A Inside Parts Kit with A-38-A Water Saver Kit.
(d.) Position Refill Head A-170 so that SIDE 1 is in the UP Position.
(e.) If no gauges are available to properly measure supply pressure or volume of water at the Flushometer, then remove the Relief Valve from the Inside Parts Kit, reassemble the Flushometer and open the Control Stop.
• If the fixture siphons, more water volume is required. If a 3.5 gpf Inside Parts Kit is installed in the Flushometer, then first flip the Refill Head (under the Diaphragm) to obtain a 4.5 gpf volume. If this volume is still inadequate, remove the Flow Ring from the Guide to obtain a 6.5 gpf Kit. If additional flow is still required, try a Low Pressure Guide Kit A-175-A (#0301104). **IMPORTANT - Laws and Regulations requiring Low Consumption Fixtures (1.6 gpf Water Closets and 1.0 gpf Urinals) prohibit the use of higher flushing volumes.**
• If fixture does not siphon or if a Low Consumption fixture is installed, or if the above steps do not prove satisfactory, steps must be taken to increase the pressure and/or supply.

3. PROBLEM: ***Flushometer closes off immediately.***
CAUSE: (a.) Ruptured or damaged Diaphragm.
(b.) Enlarged By-pass orifice from corrosion or damage.
SOLUTION: Install Inside Parts Kit to correct above problems and update Flushometer.

4. PROBLEM: ***Length of flush is too short (Short Flushing).***
CAUSE: (a.) Diaphragm Assembly and Guide Assembly are not hand-tight.
(b.) Enlarged By-pass orifice from corrosion or damage.
(c.) A-19-AU (Black) Urinal Relief Valve in Closet Flushometer.
(d.) A-41-A Low Consumption Kit installed in non-Low Consumption fixture.
(e.) Handle Assembly is worn.
SOLUTION: (a.) Screw the two assemblies hand-tight.
(b.) Install NEW Inside Parts Kit to correct problem and update Flushometer.
(c.) Replace Relief Valve with A-19-AC (White) Closet Relief Valve.
(d.) Replace with proper Inside Parts Kit.
(e.) Install Handle Repair Kit B-51-A or replace the Handle.

5. PROBLEM: ***Length of flush is too long (Long Flushing) or fails to close off.***
CAUSE: (a.) Relief Valve (A-19-A) is not seating properly or By-pass orifice is clogged because of foreign material, or By-pass orifice is closed by an invisible gelatinous film from "over-treated" water.
(b.) Line pressure has dropped and is not sufficient to force Relief Valve to seat.
(c.) A-19-AC (White) Closet Relief Valve has been used in a 1 or 1½ gpf Urinal.
(d.) Inside Cover is cracked or damaged.
SOLUTION: (a.) Disassemble the working parts and wash thoroughly. **NOTE:** SIZE OF THE ORIFICE IN THE BY-PASS IS OF UTMOST IMPORTANCE FOR THE PROPER METERING OF WATER INTO THE UPPER CHAMBER OF THE FLUSHOMETER. DO NOT ENLARGE OR DAMAGE THIS ORIFICE. REPLACE INSIDE KIT IF CLEANING DOES NOT CORRECT PROBLEM.
(b.) Shut off all control stops until pressure has been restored, then open them again.
(c.) Replace with A-19-AU (Black) Relief Valve.
(d.) Replace the Inside Cover (A-71).

6. PROBLEM: ***Chattering noise in Flushometer.***
CAUSE: (a.) The A-156-A Segment Diaphragm has been installed upside-down.
(b.) The Inside Cover has become distorted from wear, freezing or abuse.
SOLUTION: (a.) Replace the Segment Diaphragm to the proper position as instructed by markings on the Diaphragm.
(b.) Replace Inside Cover.

7. PROBLEM: ***Leaking at Handle Assembly.***
CAUSE: (a.) The B-39 Seal is worn or deteriorated.
(b.) Handle gasket has been omitted.
(c.) Valve Handle Bushing is worn.
SOLUTION: (a.) Install new B-39 Seal. NOTE: The B-39 Seal will easily slide right onto the B-40 Bushing if it is wet.
(b.) Install A-31 Handle Gasket or Sloan Handle Repair Kit (B-51-A).
(c.) Install Sloan Handle Repair Kit (B-51-A).

CARE AND CLEANING INSTRUCTIONS
DO NOT use abrasive or chemical cleaners to clean Flushometers, they may dull the luster and attack the chrome or special decorative finishes. Use ONLY soap and water, then wipe dry with a clean towel or cloth.
While cleaning the bathroom tile, the Flushometer should be protected from any splattering of cleaner. Acids and cleaning fluids can discolor or remove chrome plating.
If further assistance is required, please contact the Sloan Valve Company Installation Engineering Dept. 847/671-4300.

7. INSIDE PARTS KITS

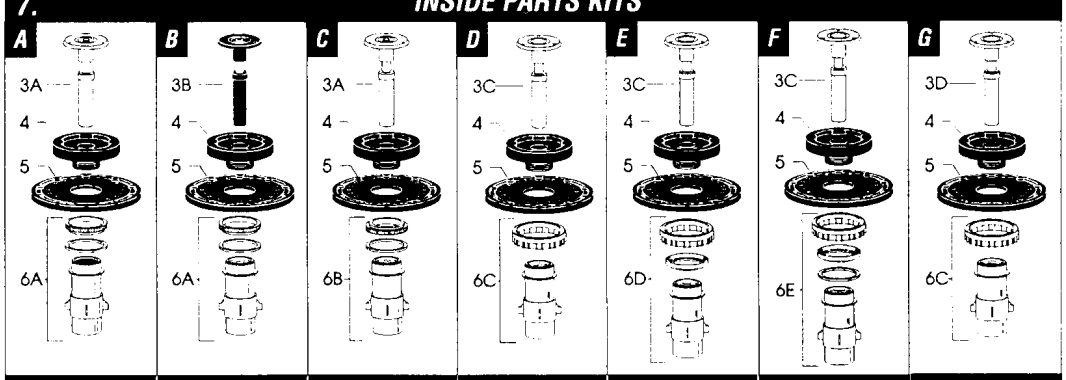

A-36-A	A-37-A	A-38-A	A-41-A	A-42-A	A-43-A	A-44-A
3301036	3301037	3301038	3301041	3301044	3301081	3301024
4.5 gpf/17.0 Lpf	1.5 gpf/5.7 Lpf	3.5 gpf/13.2 Lpf	1.6 gpf/6.0 Lpf	1.0 gpf/3.8 Lpf	0.5 gpf/1.9 Lpf	2.4 gpf/9.0 Lpf
CLOSET	URINAL	CLOSET	CLOSET	URINAL	URINAL	CLOSET

For additional information call: 610-275-4453 or Fax: 610-279-6299.
Please call for current prices.