COMMERCIAL WATER SOFTENER
MODEL DT9530ASME

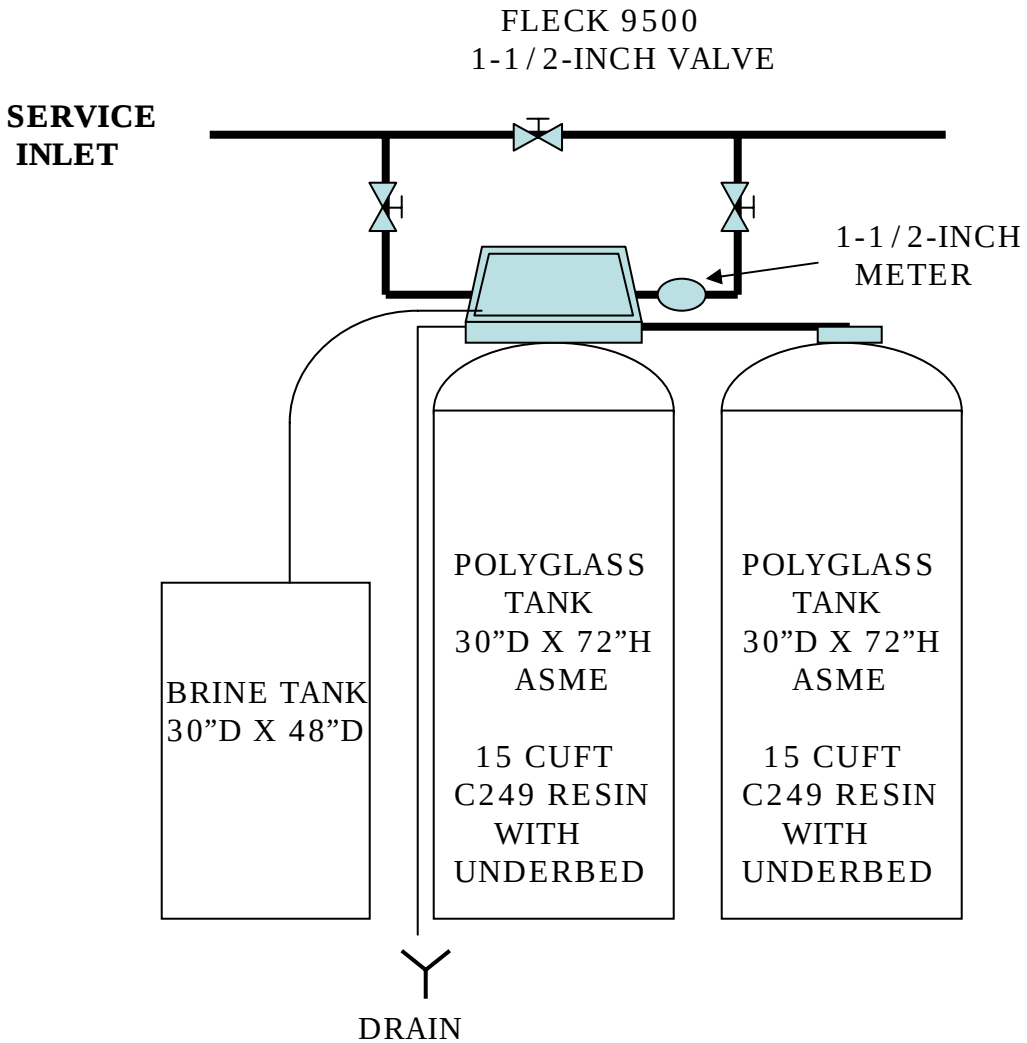

SEQUENCE:

ONE VALVE IN SERVICE.

ONE VALVE IN REGENERATION AND STAND-BY.

DUFF COMPANY	
DT9530ASME	
8 JULY, 2002	LRZ